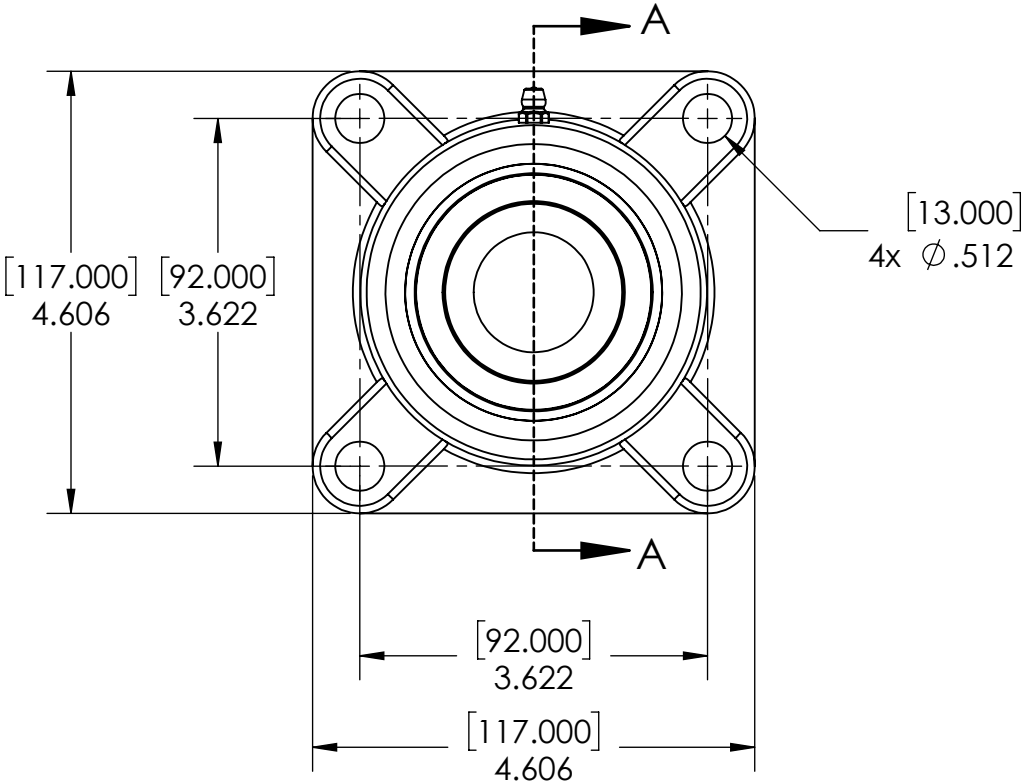

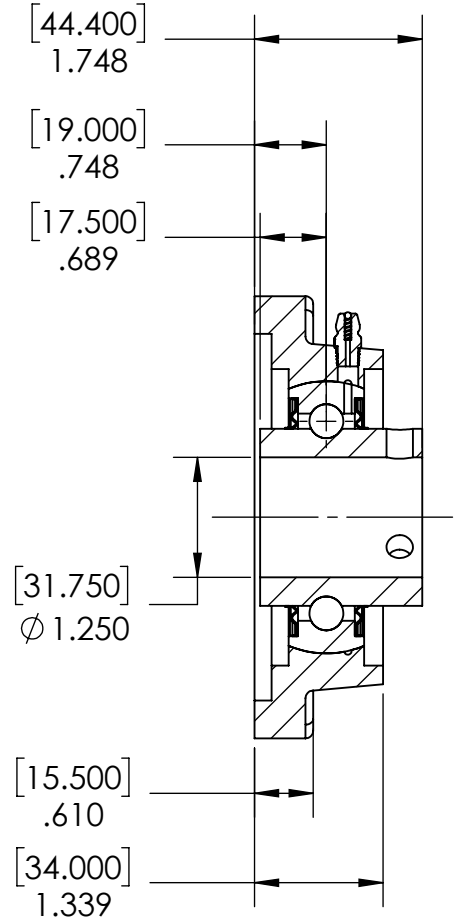

SECTION A-A

High Temp Bearings

TITLE:

1 1/4" UCF 4-BOLT FLANGE STANDARD DUTY MOUNTED BALL BEARING

SIZE	DWG. NO.	REV
A	UCF207-20	A

SCALE: NTS | WEIGHT: 3.30LBS | SHEET 1 OF 1

5 4 3 2 1